Pixsys®
ELECTRONICS

STR551

Indicator

User manual

Table of contents

1 Safety guide lines 6
2 Model identification 6
3 Technical Data 7
3.1 General data 7
4 Hardware data 7
4.1 Software data 8
5 Dimensions and Installation 9
6 Electrical wirings 9
6.1 Wiring diagram 10
7 Display and Key Functions 14
7.1 Keys 14
7.2 Display 14
8 Controller Functions 16
8.1 Memory Card (optional) 16
8.2 Modifying alarm thresholds 16
8.3 Latch on function 17
8.4 Digital input functions 18
8.5 Peak values 19
8.6 Totalizer function 19
8.7 Sum function 20
8.8 Customizable linear input 20
8.9 Alarm Intervention Modes 21
8.10 Data logger 23
9 Serial communication 24
10 Configuration 28
10.1 Modifying configuration parameters 28
10.2 Loading default values 28
11 Table of configuration parameters 29
11.1 Analogue input 29
11.2 V/I custom 33
11.3 Alarm 1 37

11.4 Alarm 2 39
11.5 Display 41
11.6 Digital input 1 42
11.7 Digital input 2 43
11.8 Graphic 43
11.9 Analogue output in mA 44
11.10 Analogue output in Volt 45
11.11 Comunication port 46

Introduction

Thanks for choosing a Pixsys device.

STR551 is an indicator/panel meter for acquisition and retransmission of processes, also with fast transient. It is provided with relay outputs for alarm purpose, analogue outputs for retransmission of process/setpoints and programmable digital inputs.

Available in standard format 96x48mm, the device can be configured both for horizontal and vertical mounting.

Distinctive feature is the intuitive multilingual interface and a 128x64 pixel graphical OLED display (monochrome yellow).

Visualization options include bargraph and process trend with programmable sampling time. Software features include mathematical functions related to process value like Totalizer and Sum.

Serial connectivity relies on RS485 and Modbus-RTU protocol.

1 Safety guide lines

Read carefully the safety guidelines and programming instructions contained in this manual before using/connecting the device. Disconnect power supply before proceeding to hardware settings or electrical wirings.

Only qualified personnel should be allowed to use the device and/or service it and in accordance to technical data and environmental conditions listed in this manual. Do not dispose electric tools together with household waste material.

In observance European Directive 2002/96/EC on waste electrical and electronic equipment and its implementation in accordance with national law, electric tools that have reached the end of their life must be collected separately and returned to an environmentally compatible recycling facility.

2 Model identification

Model 24..230 Vac/Vdc +/-15% 50/60 Hz – 8 VA	
STR551-12ABC-T128R	2 relays 2 A + 1 out V + 1 out mA + 2D.I. + RS485 + OLED + Rfid

3 Technical Data

3.1 General data

Display	2.42” monochrome (yellow) OLED graphical display
Operating temperature	Temperature 0-40 °C - Humidity 35..95 uR%
Sealing	IP54 front panel (with gasket) - IP20 box and terminals
Material	Box: polycarbonate V0
Weight	Approx. 165 g

4 Hardware data

Power supply	Extended power supply 24..230 Vac/Vdc ±15% 50/60 Hz	Consumption: 8 VA.
Analogue input	AN1 Configurable via software. Thermocouple type K, S, R, J, T, E, N, B. Automatic compensation of cold junction from 0..50 °C. Thermoresistance: PT100, PT500, PT1000, Ni100, PTC1K, NTC10K (β 3435K). Input V/I (linear): 0-10 V, 0-20, 4-20 mA, 0-60 mV. Potentiometer input: 6 KΩ, 150 KΩ.	Tolerance (25 °C) +/-0.2% ±1 digit (F.s.) for thermocouple, thermoresistance and V / mA. Cold junction accuracy 0.1 °C/°C. Impedance: 0-10 V: Ri>110 KΩ 0-20 mA: Ri<5 Ω 4-20 mA: Ri<5 Ω 0-60 mV: Ri>1 MΩ
Relay outputs	2 Relays	Contacts 2 A - 250 V~. Resistive charge.
Analogue output	1 tension Linear 0..10 Volt. 1 current Configurable as output 0..20mA or 4..20mA.	All 16bit +/-0.2% (F.s.)

4.1 Software data

Regulation algorithms	ON/OFF with hysteresis
Alarm mode	Absolute / Threshold, Band with instantaneous/delayed/ retentive action/by digital input activation, Sensor failure / Activation by serial line
Sum Function	By digital input or by keyboard it is possible to sum different process measurements over time
Totalizer Function	Visualisation of instant process value and total value since last reset
Trend visualization	Trend visualisation up to 59 samples, with selectable time basis 1 to 3600s
Analogue retransmission	Process values / Setpoints
Digital transmission	Process values / Setpoint / Parameters via RS485
Latch-on function	Semi-automatic setting of limits/ calibration values for analogue input
Data logging function	Selectable time basis 1s to 3600s, tot. memory 2.5k words
Text menus	English/Italian/Deutsch/French/Spanish

5 Dimensions and Installation

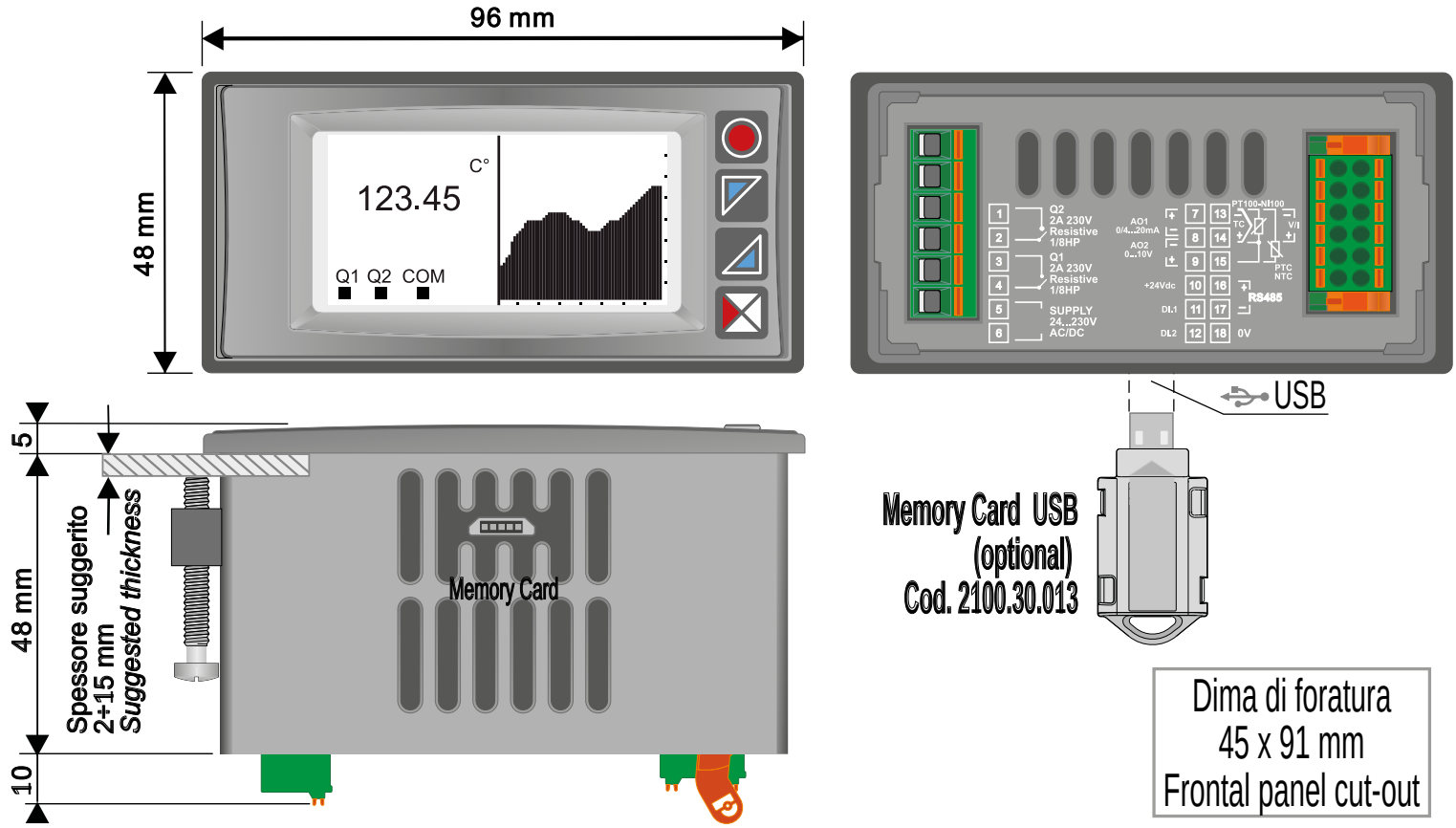

6 Electrical wirings

Although this controller has been designed to resist noises in an industrial environment, please notice the following safety guidelines:

- Separate control lines from the power wires.
- Avoid the proximity of remote control switches, electromagnetic meters, powerful engines.
- Avoid the proximity of power groups, especially those with phase control.

For permanently connected equipment:

- supply wiring must be ≥18 Awg with cables suitable for temperatures > 70 ° C;
- for requirements about any external switch or circuit-breaker see EN 61010-1 par. 6.11.3.1 and about external overcurrent protection devices see EN 61010-1 par. 9.6.2; the switch or circuit-breaker must be near the equipment.

6.1 Wiring diagram

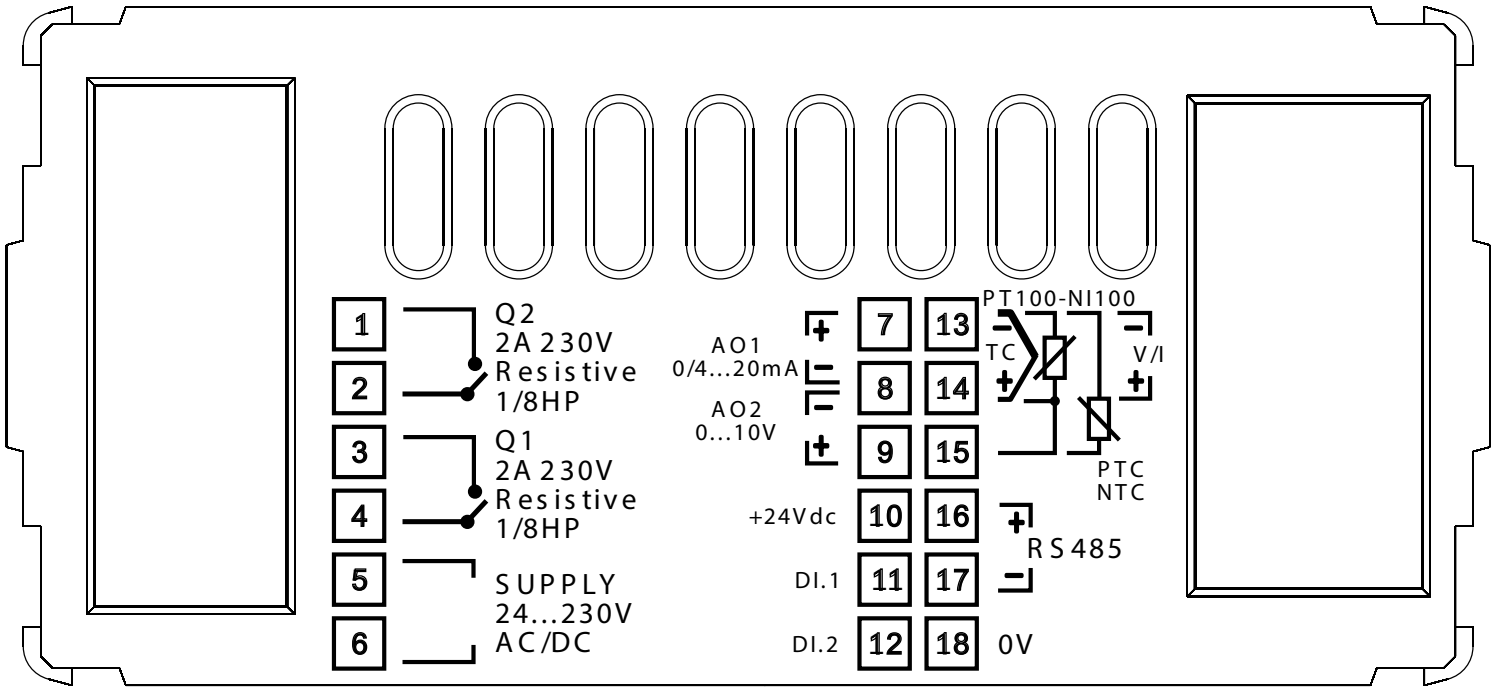

6.1.a Power supply

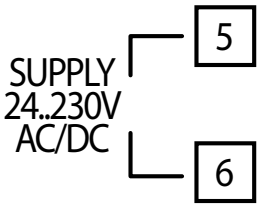

Switching supply with extended range 24…230 Vac/dc ±15% 50/60Hz – 8 VA (galvanic isolated)

6.1.b AN1 analogue imput

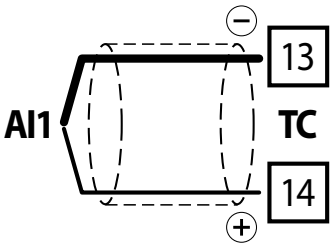

For thermocouples K, S, R, J, T, E, N, B.

- Comply with polarity.
- For possible extensions, use a compensated wire and terminals suitable for the thermocouples used (compensated).
- When shielded cable is used, it should be grounded at one side only.

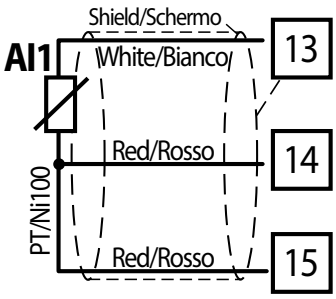

For thermoresistances PT100, NI100.

- For the three-wire connection use wires with the same section.
- For the two-wire connection short-circuit terminals 14 and 15.
- When shielded cable is used, it should be grounded at one side only.

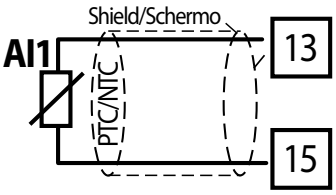

For thermoresistances NTC, PTC, PT500, PT1000 and linear potentiometers.

When shielded cable is used, it should be grounded at one side only to avoid ground loop currents.

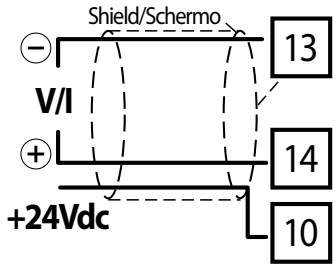

For linear signals V / mA.

- Comply with polarity.
- When shielded cable is used, it should be grounded at one side only.

6.1.c Example of connection for linear input Volt and mA

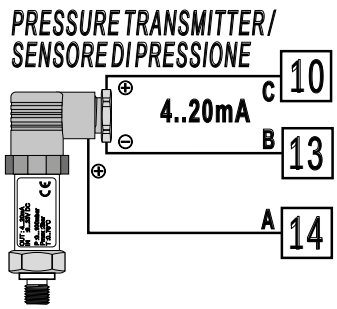

For linear signals 0/4..20 mA **with three-wire sensor**.
Comply with polarity:
A= Sensor output (+)
B= Sensor ground (-)
C= Sensor power supply (+24 Vdc / 35mA)

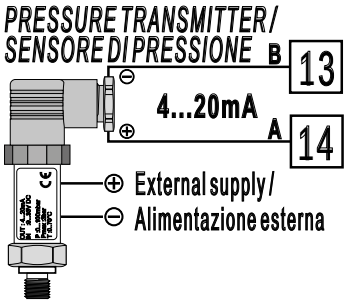

For linear signals 0/4..20 mA **with external power of sensor.**
Comply with polarity:
A= Sensor output (+)
B= Sensor ground (-)

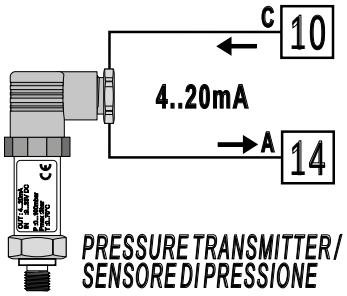

For linear signals 0/4..20 mA **with two-wire sensor.**
Comply with polarity:
A= Sensor output
C= Sensor power supply (+24 Vdc / 35mA)

6.1.d Serial input

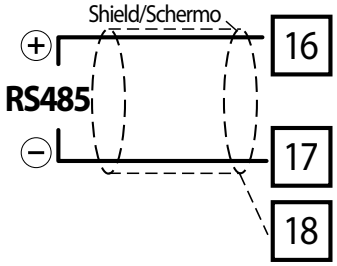

RS485 Modbus RTU communication

6.1.e Relay Q1 output

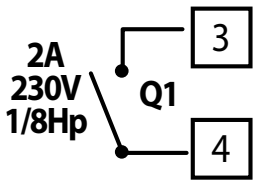

Capacity:
2 A / 250 V~ for resistive loads.
NB: see picture below

6.1.f Relay Q2 output

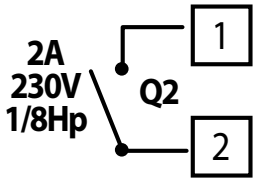

Capacity:
2A/250 V~ for resistive loads.
NB: see picture below

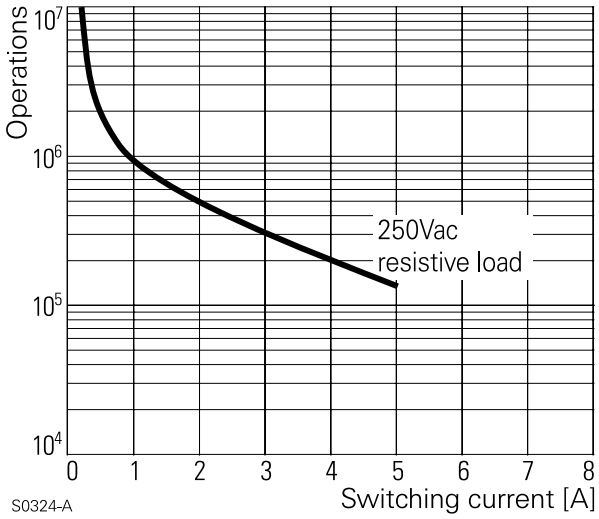

Electrical endurance Q1 / Q2.
2 A, 250 Vac, resistive load, 10^5 operations.
20/2 A, 250 Vac, cosφ = 0.3, 10^5 operations.

6.1.g mA / Volt output

Pins 7-8: linear output in **mA** configurable using parameters as retransmission of process or alarm setpoints (see par. 112-116).

Pins 8-9: linear output in **Volt** configurable using parameters as retransmission of process or alarm setpoints (vedi par. 119-123).

6.1.h Digital Input 1

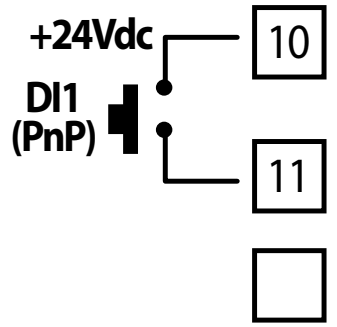

PNP digital input
Digital input according to parameter 95

Short-circuit pins 10 and 11 to activate the digital input 1

6.1.i Digital input 2

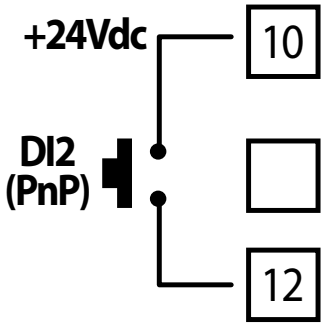

PNP digital input
Digital input according to parameter 100

Short-circuit pins 10 and 12 to activate the digital input 2

7 Display and Key Functions

7.1 Keys

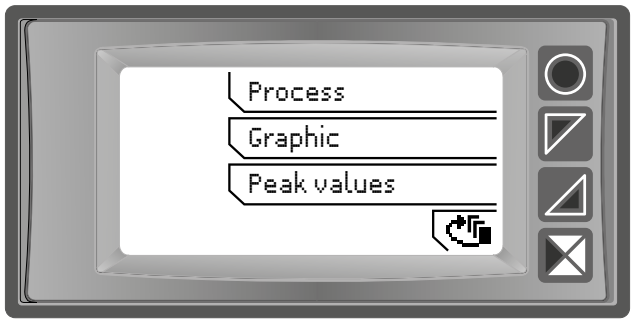

Keys are multifunction: in correspondence of each key its meaning is displayed.
If no description is showed, press a key to visualize it. Some menus will be only displayed, when activated.

7.2 Display

It visualizes the process, the setpoints and all configuration parameters. The programming/ operation interface with text menus in 5 languages makes the navigation intuitive.

At first starting, display shows the language selection.

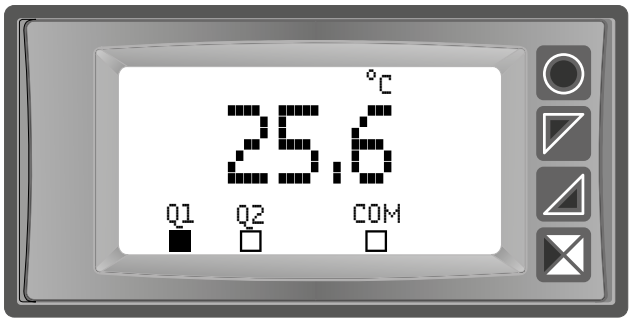

This page displays the process, the relays status and the serial communication (if available).

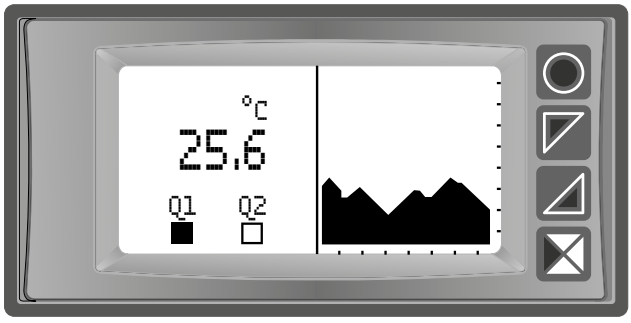

This page displays the process, the relays status and a graph representing the process trend.

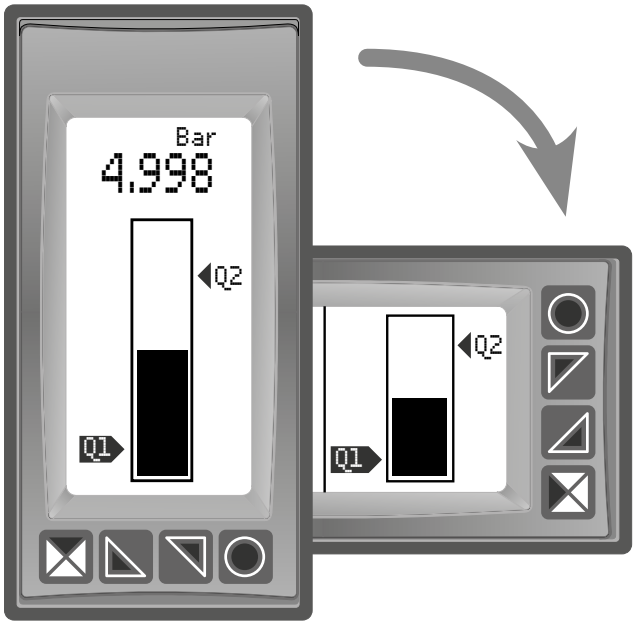

This page displays the process and its graphic representation as bargraph.

8 Controller Functions

8.1 Memory Card (optional)

Parameters and setpoint values can be duplicated from one controller to another using the Memory card.
Insert memory card when the controller is off. On activation, after startup, the display visualizes *"Load data"* and *"Esc"* in correspondence of the relative keys (only if the correct values are saved in the memory card). Pressing *"Load data"* the controller loads the new values. Pressing *"Esc"* the device keeps the old values.

Updating Memory Card.
To update the memory card values, follow the procedure described on first mode, pressing *"Esc"* so as not to load the parameters on controller. Enter configuration and change at least one parameter. Exit configuration. Changes are stored automatically.

8.2 Modifying alarm thresholds

Selecting one or more absolute/ band alarms, it is possible to modify the intervention thresholds directly by the user menu, without entering configuration.

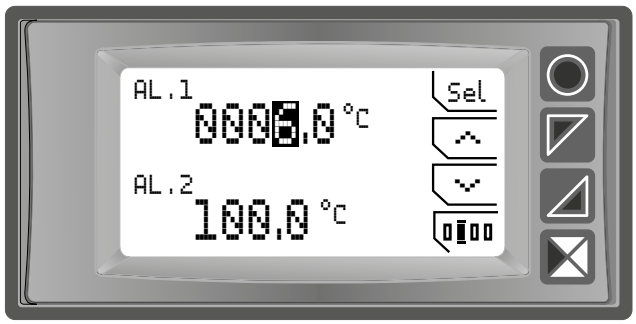

Press *"Setpoint"* to enter the thresholds modification.

For the modification procedure refer to the following table:

Press	Display	Do
1 *"Sel"*	Selects the setpoint to be modified.	Press ^ e v to modify the value. Pressing ▯▮▯▯ it is possible to modify digit per digit.

	Press	Display	Do
2	*"Sel"*	Selects the next setpoint (if active), otherwise go to point 3.	See point 1.
3	*"Sel"*	^ and v disappear	Press *"Esc"* to exit procedure.

8.3 Latch on function

For the use with input Potentiometers max.6 kohm and Pot.max.150 kohm and with linear input (0..10 V, 0..60 mV, 0/4..20 mA), it is possible to associate the start value of the scale (par. 4 **Lower limit V/I**) to the minimum position of the sensor and the value of end scale (par. 5 **Upper limit V/I**) to the maximum position of the sensor.

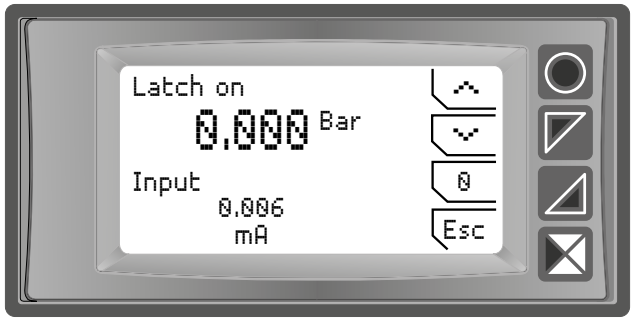

To use the LATCH ON function: enter configuration, select **Setting** on par. 8 **Latch on** and press *"Sel"* (STR551 shows the page in the picture).

For the calibration procedure refer to the following table:

	Press	Display	Do
3	^	Set the value to maximum.	To exit standard procedure press *"Esc"*. For zero settings place the sensor on the zero point
1			Place the sensor on minimum operating value (associated with **Lower limit V/I**).
2	v	Set the value on minimum.	Place the sensor on maximum operating value (associated with **Upper limit V/I**).
4	*"0"*	Set the virtual zero value.	Press *"Esc"* to exit procedure.

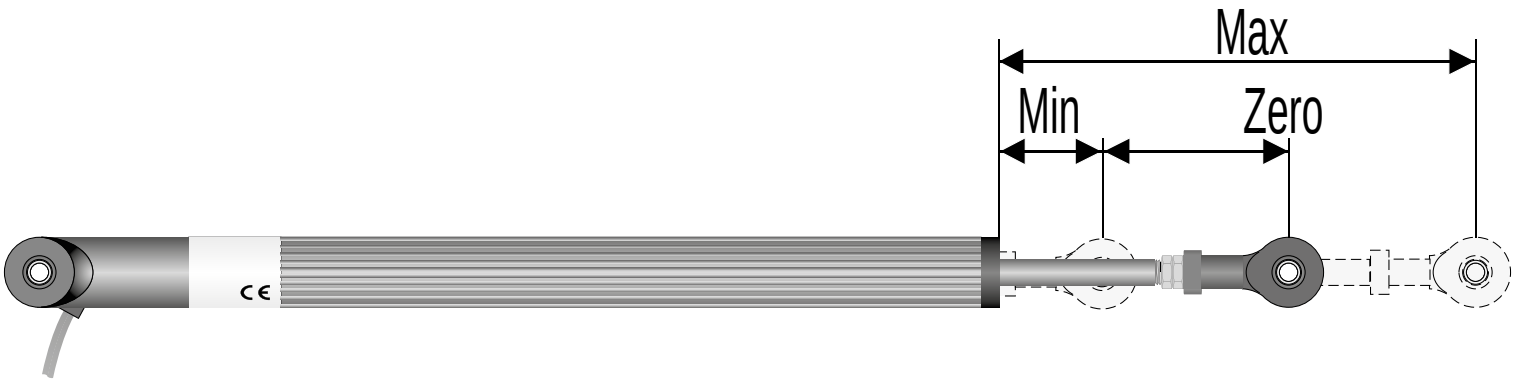

8.4 Digital input functions

On the STR551 model, digital inputs can be enabled by configuring the par. 95 **Digital input 1** and the par. 100 **Digital Input 2.**

- **Run**: allows the action of relays and linear output.
- **Hold**: locks the conversion.
- **Tare zero (AI)**: selects to zero the process value (tare function).
- **Alarm reset:** if one or more alarms are selected with manual reset and alarm conditions are no longer present, closing the digital input it is possible to restore the alarm output.
- **Totalizer reset**: if the totalizer function is active, using the digital input it is possible to reset the counter.
- **Peaks reset**: min. peak/max. peak/peak-to-peak values are reset.
- **Sum total**: if the sum function is active, using the digital input it is possible to increase the *"sum"* counter as indicated by the process value.
- **Sum reset**: if the sum function is active, using the digital input it is possible to reset the *"sum"* counter.
- **Config. lock**: if the digital input is active it is not possible to enter configuration or to modify the setpoints.

Selecting **Digital input 1** or **Digital input 2** on the alarm parameters, the related relays will activate togheter with the digital input; functions selected on parameters 95 and 100 will continue to work.
To store value in eeprom, see parameter **11 Store**.

8.5 Peak values

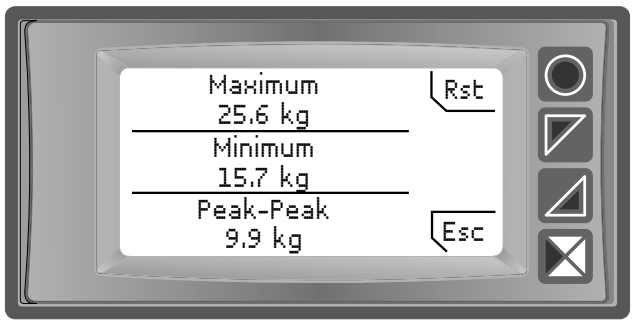

The STR551 is provided with a page for the visualization of peak values: max. peak, min. peak and peak-to-peak of analogue input. Keeping pressed *"Rst"* it is possible to reset the visualized values.

8.6 Totalizer function

The totalizer function, which can be enable by par. 9 **Totalizer,** performs an instant measurement of the process and sums it on a time basis to the previously totalized value.

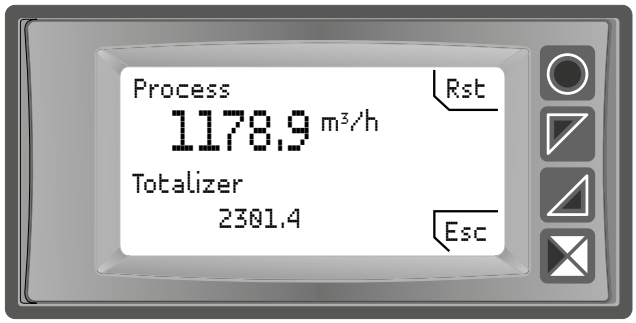

On the dedicated page it is possible to see the instant process value and the totalized value: keeping pressed *"Rst"* it is possible to reset this value.

Ex.: if a sensor 4..20mA with F.s. 9000m³/hour is connected, it is necessary to select **Hour** on par. 9 **Totalizer.** The device will increase the totalized value considering the m³ flowing each second (2.5m³).
To store value in eeprom, see parameter **11 Store**.

8.7 Sum function

The sum function, which can be enabled by par. 10 **Sum function,** allows to increase a counter adding the process value on command. It is an application typical for weighing systems and allows to know the total weighed value.

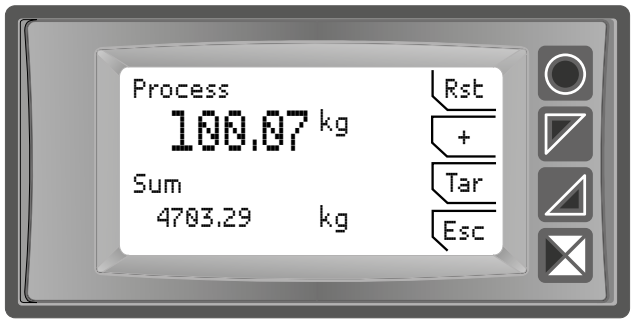

Press *"Sum Function"* to enter the function page. Pressing "+" the **Process** value is added to the counter. It is possible to reset the total value keeping pressed *"Rst"* and to fix *"tare zero"* of the process pressing *"Tar"*.

Functions tare, sum and reset can be managed also by digital input if enabled on par. 95 **Digital Input 1** and par. 100 **Digital Input 2**.
To store value in eeprom, see parameter **11 Store**.

8.8 Customizable linear input

Selecting **16 steps** on par. 17 **V/I custom** and connecting a linear sensor it is possible to customize the linear input for a max. of 16 steps. On parameters **xx-Input value** it is necessary to enter the value of the input to which the value selected on the corresponding parameter **xx-Custom value** will be related.
Example: sensor 0-10V.

01-Input value => 0.000V	01-Custom value=>0mBar
02-Input value => 2.000V	02-Custom value=>100mBar
03-Input value => 5.000V	03-Custom value=>500mBar
04-Input value => 10.000V	04-Custom value=>1000mBar

At each value in volt (input) it is related a value in mBar (customized): if the sensor supplies 2V the device visualizes 100mBar, if it supplies 5V the device visualizes 500mBar. For intermediate tension values the value in mBar is calculated linearly between the entered values containing it: 1V = 50mBar, 3.5V=300mBar and 7V=700mBar.

8.9 Alarm Intervention Modes

8.9.a Absolute alarm (absolute selection)

1

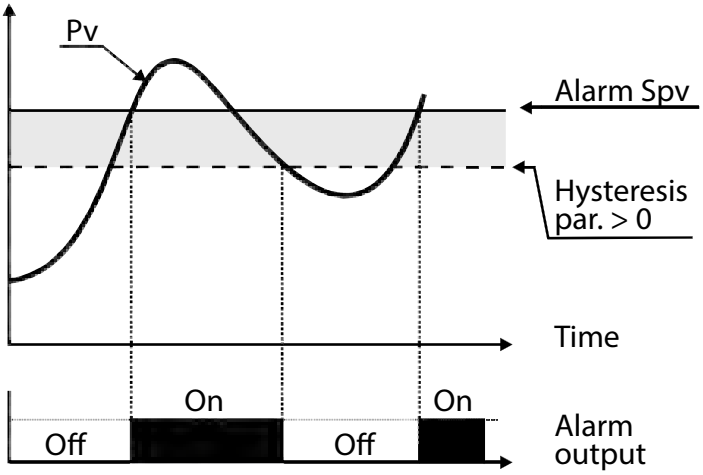

Absolute alarm and hysteresis value greater than “0” (Par. 58 **hysteresis** > 0).
N.B. The example refers to alarm 1; the function can also be enabled for alarms 2

2

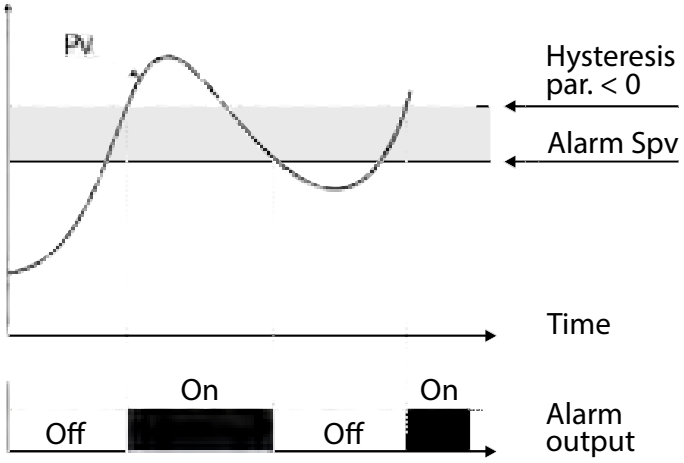

Absolute alarm and hysteresis value less than “0” (Par. 58 **hysteresis** < 0).
N.B. The example refers to alarm 1; the function can also be enabled for alarms 2.

8.9.b Band alarm (band selection)

1

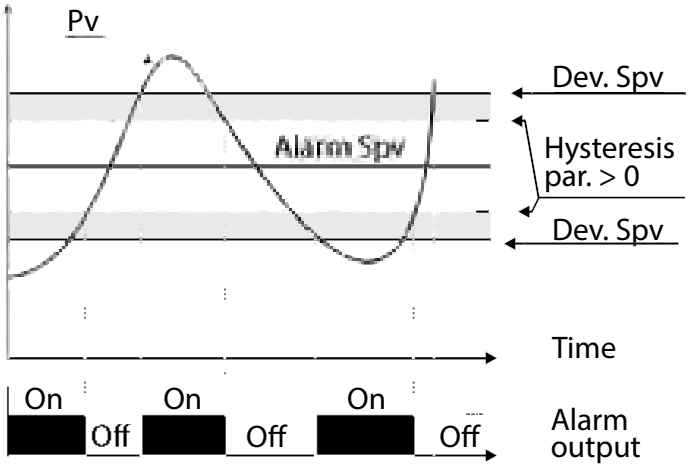

Band alarm and hysteresis value greater than “0” (Par. 58 **hysteresis** > 0).
N.B. The example refers to alarm 1; the function can also be enabled for alarms 2.

2

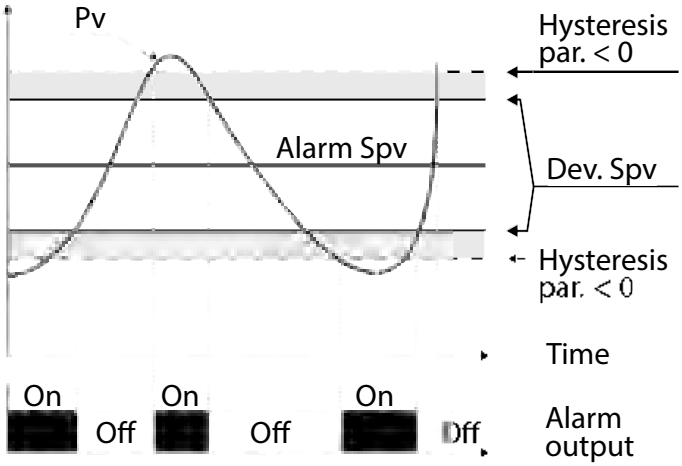

Band alarm and hysteresis value less than “0” (Par. 58 **hysteresis** < 0).
N.B. The example refers to alarm 1; the function can also be enabled for alarms 2.

8.9.c Digital input alarm (sel. “Digital input 1” or “Digital input 2”)

Alarm related to digital input: the relay activates with digital input active.

8.9.d Loop Break Alarm (selection“L.B.A.”)

Sensor alarm breakage: the relay activates in case of sensor breakage or sensor out of range.

8.9.e Remote control alarm (selection “remote Ctrl ”)

The relay activates writing 1 on word modbus 1015 for the alarm 1 and on word modbus 1016 for the alarm 2. Writing 0 the relay deactivates.

8.10 Data logger

STR551 implements a basic Data logger function which can be enabled by par. 109 **Data logger.** Right after startup, the device starts storing the process data on EEPROM memory, the sampling time has to be selected on par. 108 **Graphic time**. Data can be read via Modbus starting from address 5001 (see next paragraph)
or via wireless reading the RFid memory directly from address 0x600 (1536). The first data give a reference about the type of saved process values: refer to the following table for the description of the saved data.

0x600	1536	Data logger: firmware version
0x601	1537	Data logger: sensor type
0x602	1538	Data logger: decimal point
0x603	1539	Data logger: measure unit
0x604	1540	Data logger: sampling time in seconds
0x605	1541	Data logger: end memory flag. **0** indicates that memory still available. **1** indicates that the memory is exhausted and the device resumed saving data from address 5017
0x610	1552	First saved value of analogue input
0x611	1553	Second saved value of analogue input
...	...	...
0xFFF	4095	Last saved value of analogue input

The reading of value 0x8000 (-32768) indicates the end of the saved data: subsequent read data are not valid.

9 Serial communication

STR551-12ABC-T equipped with RS485 can receive and broadcast data via serial communication using MODBUS RTU protocol. The device can be configured only as a Slave. This function enables the control of multiple controllers connected to a supervisory system. Each controller responds to a master query only if the query contains the same address as that in the parameter par. 126 **Slave address**.

The permitted addresses range from 1 to 254 and there must not be controllers with the same address on the same line.

Address 255 can be used by the master to communicate with all the connected equipment (broadcast mode), while with 0 all the devices receive the command, but no response is expected. STR551 can introduce a delay (in milliseconds) in the response to the master request. This delay must be set on parameter 129 **Serial Delay**. Each parameter change is saved by the controller on EEPROM memory (100000 writing cycles).

NB: changes made to Words that are different from those reported in the following table can lead to malfunction.

Modbus RTU protocol features	
Baud-rate	Selection on par. 127 Baud Rate: 1.200 baud 28.800 baud 2.400 baud 38.400 baud 4.800 baud 57.600 baud 9.600 baud 115.200 baud 19.200 baud
Format	Selection on par. 128 Serial format: 8, N, 1 (8 bit, no parity, 1 stop) 8, E, 1 (8 bit, even parity, 1 stop) 8, O, 1 (8 bit, odd parity, 1 stop) 8, N, 2 (8 bit, no parity, 2 stop) 8, E, 2(8 bit, even parity, 2 stop) 8, O, 2 (8 bit, odd parity, 2 stop)

Modbus RTU protocol features	
Supported functions	WORD READING (max 20 word) (0x03, 0x04) SINGLE WORD WRITING (0x06) MULTIPLE WORDS WRITING (max 20 word) (0x10)

Looking at the table here below it is possible to find all available addresses and functions:

RO	Read Only	R/W	Read / Write	WO	Write Only

Modbus Address	Description	Read Only	Reset value
0	Device type	RO	EEPROM
1	Software version	RO	EEPROM
5	Slave address	R/W	EEPROM
6	Boot version	RO	EEPROM
1000	Process (degrees.tenths for temperature sensors; digit for linear sensors)	RO	0
1001	Min. peak (degrees.tenths for temperature sensors; digit for linear sensors)	RO	0
1002	Max. peak (degrees.tenths for temperature sensors; digit for linear sensors)	RO	0
1003	Peak-to-peak (degrees.tenths for temperature sensors; digit for linear sensorsati)	RO	0
1004	Totalizer value (H)	RO	EEPROM
1005	Totalizer value (L)	RO	EEPROM
1006	Sum value (H)	RO	EEPROM
1007	Sum value (L)	RO	EEPROM
1008	Cold junction temperature (degrees.tenths)	RO	EEPROM
1009	Relays status (0 = Off, 1 = On): Bit 0 = Relay **Q1** Bit 1 = Relay **Q2**	RO	0

Modbus Address	Description	Read Only	Reset value
1010	Digital inputs status (0 = Off, 1 = Active): Bit 0 = **D.I.1** Bit 1 = **D.I.2**	RO	-
1011	Keys status (0 = released, 1 = pressed): Bit 0 = Bit 1 = Bit 2 = Bit 3 =	RO	0
1012	Error flags Bit 0 = Cold junction error Bit 1 = Process error (sensor) Bit 2 = Eeprom writing error Bit 3 = Eeprom reading error Bit 4 = Missing calibration data error Bit 5 = Generic error Bit 6 = Hardware error	RO	0
1013	Alarms status (0 = None, 1 = Active) Bit 0 = Alarm 1 Bit 1 = Alarm 2	RO	0
1014	Manual reset: write 0 to reset all alarms. In reading (0 = Not resettable, 1 = Resettable) Bit 0 = Alarm 1 Bit 1 = Alarm 2	R/W	0
1015	Alarm 1 status (remote control)	R/W	0
1016	Alarm 2 status (remote control)	R/W	0
1017	mA analogue output value (remote control)	R/W	0
1018	Volt analogue output value (remote control)	R/W	0
1019	Run by serial 0 = Inhibited outputs 1 = Active outputs	R/W	1

Modbus Address	Description	Read Only	Reset value
1020	Hold by serial 0 = Active analogue input 1 = Analogue input in Hold	R/W	0
1021	Tare zero AI (write 1)	R/W	0
1022	Totalizer reset (write 1)	R/W	0
1023	Peaks reset (write 1)	R/W	0
1024	Sum total (write 1)	R/W	0
1025	Total sum reset (write 1)	R/W	0
2001	Parameter 1	R/W	EEPROM
2002	Parameter 2	R/W	EEPROM
2150	Parameter 150	R/W	EEPROM
4001	Parameter 1*	R/W	EEPROM
4002	Parameter 2*	R/W	EEPROM
4150	Parameter 150*	R/W	EEPROM
5001	Data logger: firmware version	R	EEPROM
5002	Data logger: sensor type	R	EEPROM
5003	Data logger: decimal point	R	EEPROM
5004	Data logger: measure unit	R	EEPROM
5005	Data logger: sampling time in seconds	R	EEPROM
5006	Data logger: End memory flag. **0** indicates that there is still available memory. **1** indicates that the memory is ended and the device resumed to saved data form address 5017	R	EEPROM
5017	First value of analogue input stored	R	EEPROM
5018	Second value of analogue input stored	R	EEPROM
...	...	R	EEPROM
7561	Last value of analogue input stored	R	EEPROM

* *Parameters modified using serial address 4001 to 4150, will be stored on eeprom only after 10s since last writing of one parameter.*

10 Configuration

10.1 Modifying configuration parameters

For configuration parameters see par. 11

	Press	Display	Do
1	*"Configuration"*	Shows 0000 with the 1st digit selected.	
2	^ and v	Changes the selected digit and moves to the next one using .	Enter password 1234
3	*"Sel"* to confirm	Shows the names of the parameter groups.	
4	^ and v	Scroll up / down the parameter groups.	
5	*"Sel"* to enter the parameter group	Shows the parameters of the selected group.	Press ^ and v to select parameter to be modified.
6	*"Sel"* to enter the parameter modification	Shows all parameter possible selections or the parameter numeric value.	Press ^ and v to modify parameter. For numeric parameters, pressing it is possible to modify digit-to-digit. Press *"Sel"* to confirm modification. Press *"<"* to exit without modify.

10.2 Loading default values

Enter password 9999 to restore factory settings of the device.

11 Table of configuration parameters

The following table includes all parameters. Some of them will not be visible on the models which are not provided with relevant Hardware data.

11.1 Analogue input

Parameters to configure the analogue input.

1 Sensor type

Analogue input configuration/sensor selection

Thermocouple K (**Default**)	-260 °C..1360 °C
Thermocouple S	-40 °C..1760 °C
Thermocouple R	-40 °C..1760 °C
Thermocouple J	-200 °C..1200 °C
Thermocouple T	-260 °C..400 °C
Thermocouple E	-260 °C..1000 °C
Thermocouple N	-260 °C..1280 °C
Thermocouple B	+80 °C..1820 °C
Pt100	-200 °C..600 °C
Ni100	-60 °C..180 °C
NTC 10kOhm	-40 °C..125 °C
PTC 1kOhm	-50 °C..150 °C
Pt500	-100 °C..600 °C
Pt1000	-100 °C..600 °C
0..10 V	
0..20 mA	
4..20 mA	
0..60 mV	
Pot. max. 6 kOhm	
Pot. max. 150 kOhm	

2 Decimal Point

Selects type of the visualized decimal point

0	No decimals. **Default**
0.0	1 Decimal
0.00	2 Decimals
0.000	3 Decimals

3 Measure unit

Selects the visualized measure unit

°C (**Default**)	g	ph	kg/h
°F	kg	N	GPS
K	q	kN	GPM
V	t	%	GPH
mV	oz	L	inH2O
A	lb	gala	inHg
mA	m/s	mmHg	FPS
Bar	m/m	atm	FPM
mBar	m/h	mH2O	FPH
psi	l/s	Nm	Ton
Pa	l/m	kNm	ppmv
mm	l/h	kgf	ppmw
cm	m^3/s	kgp	hPa
dm	m^3/m	kip	kPa
m	m^3/h	lbf	MPa
km	rpm	ozf	
in	%rh	pcs	

4 Lower limit V/I

Range AN1 lower limit only for linear input. Ex: with input 4..20 mA this parameter takes value associated to 4 mA

-32767 ÷ **32767** [digit[1]], **Default**: 0.

5 Upper limit V/I

Range AN1 upper limit only for linear input. Ex: with input 4..20 mA this parameter takes value associated to 20 mA
-32767 + **32767** [digit[1]], **Default**: 1000.

6 Offset calibration

Value added / subtracted to the process visualization (usually correcting the
value of environmental temperature)
-1000..+1000 [digit[1]] for linear sensors and potentiometers.
-100.0..+100.0 (degrees.tenths for temperature sensors). **Default** 0.0.

7 Gain calibration

Percentage value that is multiplied for the process value (allows to calibrated the working point)
-100.0%..+100.0%, **Default**: 0.0
ex: to correct the range from 0..1000°C showing 0..1010°C, set the par. to -1.0.

8 Latch On

Automatic setting of limits for linear inputs and potentiometers. *(see par. 8.3)*
Disabled (**Default**)
Enabled
Setting

9 Totalizer

Visualizes the total **fluid** volume considering the sensor signal as unit/time value (ex. if the connected sensor has an output 4..20mA with F.s. 2000m^3/hour, the parameter 9 **Totalizer** has to be selected as **Hour** and the display will visualize the total fluid volume from the last RESET/START signal). *(see par. 8.6)*

Disabled	Display visualizes the process (**Default**)
Second	Display visualizes the flow in unit/s
Minute	Display visualizes the flow in unit/min
Hour	Display visualizes the flow in unit/hour

10 Sum function

Enables the sum function and its dedicated page. Allows to sum the process value to a variable. *(see par. 8.7)*
Disabled (**Default**)
Enabled

11 Store

Enables to store in eeprom the values of peak, totalizer, sum function and tare zero. If disabled, at starting the above-mentioned values start from 0. The storing is done automatically every 5 minutes.
Disabled (**Default**)
Enabled

12 Filter samples

ADC Filter: number of input sensor readings to calculate the mean that defines process value. **NB**: when readings increase, control loop speed slows down.
1..15 means **Default**: 10.

13 Sampling frequency

Sampling frequency of analogue / digital converter.
NB: Increasing the conversion speed will slow down reading stability (ex: for fast transients, as pressure, it is advisable to increase sampling frequency)

242 Hz	4.2ms (Maximum speed conversion)
123 Hz	8.2ms
62 Hz	16.1ms
50 Hz	20ms
39 Hz	25.6ms
33.2 Hz	30.1ms
19.6 Hz	51ms
16.7 Hz	(**Default**) 59.9ms Ideal for filtering noises 50 / 60 Hz
12.5 Hz	80ms

10 Hz	100ms
8.33 Hz	120ms
6.25 Hz	160ms
4.17 Hz	240ms (Minimum speed conversion)

11.2 V/I custom

Parameters to configure the customizable linear input. *(see par. 8.8)*

17 V/I custom

Selects the linearization type for the analogue input if selected as linear.
Lower and upper limits. The input will be linearized by parameters 4 and 5 (**Default**)
16 spezzate. The input will be linearized by parameter 18-49

18 01-Input value

Defines the input value to which the 1st customized value is assigned
0..20000 **Default**: 0.

19 01-Custom value

Defines the 1st customized value assigned to the input
-32767..32767 [Digit[1]] **Default**: 0.

20 02-Input value

Defines the input value to which the 2nd customized value is assigned
0..20000 **Default**: 2000.

21 02-Custom value

Defines the 2nd customized value assigned to the input
-32767..32767 [Digit[1]] **Default**: 1000.

22 03-Input value

Defines the input value to which the 3rd customized value is assigned
0..20000 **Default**: 0.

23 03-Custom value

Defines the 3rd customized value assigned to the input
-32767..32767 [Digit[1]] **Default**: 0.

24 04-Input value

Defines the input value to which the 4th customized value is assigned
0..20000 **Default**: 0.

25 04-Custom value

Defines the 4th customized value assigned to the input
-32767..32767 [Digit[1]] **Default**: 0.

26 05-Input value

Defines the input value to which the 5th customized value is assigned
0..20000 **Default**: 0.

27 05-Custom value

Defines the 5th customized value assigned to the input
-32767..32767 [Digit[1]] **Default**: 0.

28 06-Input value

Defines the input value to which the 6th customized value is assigned
0..20000 **Default**: 0.

29 06-Custom value

Defines the 6th customized value assigned to the input
-32767..32767 [Digit[1]] **Default**: 0.

30 07-Input value

Defines the input value to which the 7th customized value is assigned
0..20000 **Default**: 0.

31 07-Custom value

Defines the 7th customized value assigned to the input
-32767..32767 [Digit[1]] **Default**: 0.

32 08-Input value

Defines the input value to which the 8th customized value is assigned
0..20000 **Default**: 0.

33 08-Custom value

Defines the 8th customized value assigned to the input
-32767..32767 [Digit[1]] **Default**: 0.

34 09-Input value

Defines the input value to which the 9th customized value is assigned
0..20000 **Default**: 0.

35 09-Custom value

Defines the 9th customized value assigned to the input
-32767..32767 [Digit[1]] **Default**: 0.

36 10-Input value

Defines the input value to which the 10th customized value is assigned
0..20000 **Default**: 0.

37 10-Custom value

Defines the 10th customized value assigned to the input
-32767..32767 [Digit[1]] **Default**: 0.

38 11-Input value

Defines the input value to which the 11th customized value is assigned
0..20000 **Default**: 0.

39 11-Custom value

Defines the 11th customized value assigned to the input
-32767..32767 [Digit[1]] **Default**: 0.

40 12-Input value

Defines the input value to which the 12th customized value is assigned
0..20000 **Default**: 0.

41 12-Custom value

Defines the 12th customized value assigned to the input
-32767..32767 [Digit[1]] **Default**: 0.

42 13-Input value

Defines the input value to which the 13th customized value is assigned
0..20000 **Default**: 0.

43 13-Custom value

Defines the 13th customized value assigned to the input
-32767..32767 [Digit[1]] **Default**: 0.

44 14-Input value

Defines the input value to which the 14th customized value is assigned
0..20000 **Default**: 0.

45 14-Custom value

Defines the 14th customized value assigned to the input
-32767..32767 [Digit[1]] **Default**: 0.

46 15-Input value

Defines the input value to which the 15th customized value is assigned
0..20000 **Default**: 0.

47 15-Custom value

Defines the 15th customized value assigned to the input
-32767..32767 [Digit[1]] **Default**: 0.

48 16-Input value

Defines the input value to which the 16th customized value is assigned
0..20000 **Default**: 0.

49 16-Custom value

Defines the 16th customized value assigned to the input
-32767..32767 [Digit[1]] **Default**: 0.

11.3 Alarm 1

Parameters to configure the Alarm 1. *(see par. 8.9)*

54 Alarm type

Alarm 1 selection
Disabled (**Default**)
Absolute alarm
Band alarm
Digital input 1
Digital input 2
Sensor failure
Remote control by Modbus

55 Contact type

Selects the alarm 1 output contact and intervention type
Normally open (**Default**)
Normally closed
N.O.-Disabled Power on
N.C.-Disabled Power on

56 Alarm threshold

Selects the alarm 1 setpoint
-32767..+32767 [Digit[1]] (degrees.tenths for temperature sensors), **Default**: 0.0.

57 Deviation threshold

Selects the deviation from alarm 1 setpoint for the band alarm
0..+32767 [Digit[1]] (degrees.tenths for temperature sensors), **Default**: 0.0.

58 Hysteresis

Alarm 1 hysteresis
-1000..+1000 [Digit[1]] (degrees.tenths for temperature sensors), **Default**: 0.0.

59 Reset type

Alarm 1 contact reset type

Automatic:	(**Default**)
Manual:	Manual reset by keyboard
Manual stored:	Keeps relay status also after an eventual power failure

60 Error contact

State of contact for alarm 1 output in case of error
Open (**Default**)
Closed

62 Actuation delay

Alarm 1 delay.
-3600..+3600 seconds. **Default**: 0
Negative: delay in alarm output phase.
Positive: delay in alarm entry phase.

63 Lower limit

Lower limit for alarm 1 setpoint.
-32767..+32767 [Digit[1]] (degrees.tenths for temperature sensors). **Default**: 0.

64 Upper limit

Upper limit for alarm 1 setpoint
-32767..+32767 [Digit[1]] (degrees.tenths for temperature sensors). **Default**: 1000.

65 Protection

Alarm 1 set protection. Does not allow user to modify setpoint

Free	Modification allowed (**Default**)
Lock	Protected
Hide	Protected and not visualized

11.4 Alarm 2

Parameters to configure the Alarm 2

69 Alarm type

Alarm 2 selection

Disabled (**Default**)
Absolute alarm
Band alarm
Digital input 1
Digital input 2
Sensor failure
Remote control by Modbus

70 Contact type

Selects the alarm 2 output contact and intervention type
Normally open (**Default**)
Normally closed
N.O.-Disabled Power on
N.C.-Disabled Power on

71 Alarm threshold

Selects the alarm 2 setpoint
-32767..+32767 [Digit[1]] (degrees.tenths for temperature sensors), **Default**: 0.0.

72 Deviation threshold

Selects the deviation from alarm 2 setpoint for the band alarm
0..+32767 [Digit[1]] (degrees.tenths for temperature sensors), **Default**: 0.0.

73 Hysteresis

Alarm 2 hysteresis
-1000..+1000 [Digit[1]] (degrees.tenths for temperature sensors), **Default**: 0.0.

74 Reset type

Alarm 2 contact reset type

Automatic:	(**Default**)
Manual:	Manual reset by keyboard
Manual stored:	Keeps relay status also after an eventual power failure

75 Error contact

State of contact for alarm 2 output in case of error
Open (**Default**)
Closed

77 Actuation delay

Alarm 2 delay.
-3600..+3600 seconds. **Default**: 0
Negative: delay in alarm output phase.
Positive: delay in alarm entry phase.

78 Lower limit

Lower limit for alarm 2 setpoint.
-32767..+32767 [Digit[1]] (degrees.tenths for temperature sensors). **Default**: 0.

79 Upper limit

Upper limit for alarm 2 setpoint
-32767..+32767 [Digit[1]] (degrees.tenths for temperature sensors). **Default**: 1000.

80 Protection

Alarm 2 set protection. Does not allow user to modify setpoint

Free	Modification allowed (**Default**)
Lock	Protected
Hide	Protected and not visualized

11.5 Display

84 Language

Selects the language

English (**Default**)	Deutsch	Español
Italiano	Français	

86 Contrast

Selects the contrast value for the display

0%..100%, **Default**: 80%.

87 Reverse

Enables the display reverse visualization

Disabled (**Default**)

Enabled

88 Screen timeout

Determines the time after which the display switches to standby mode when no key has been pressed, reducing brightness so as not to be an inconvenience in environments with little lighting and to extend the display's life time.

Always on (**Default**)

15 seconds	2 minutes	30 minutes
30 seconds	5 minutes	1 hour
1 minute	10 minutes	

89 Display direction

Selects the display visualization direction.
Horizontal (**Default**)
Vertical

90 Starting page

Selects the page visualized at starting after the initial splash screen
Process (**Default**)
Graphic
Peak values
Totalizer
Sum function

11.6 Digital input 1

Parameters to configure the digital input 1.

95 Digital input function

Selects the digital input 1 function. *(see par. 8.4)*
Disabled (**Default**)
Run
Hold
Tare zero (AI) (impulse functioning)
Alarm reset
Totalizer reset (impulse functioning)
Peaks reset
Sum total (impulse functioning)
Sum reset (impulse functioning)
Config. lock

96 Contact type

Selects the digital input 1 inactive contact.
Normally open (**Default**) Executes function with closed contact
Normally closed Executes function with open contact

11.7 Digital input 2

Parameters to configure the digital input 2. *(see par. 8.4)*

100 Input function

Selects the digital input 2 function
Disabled (**Default**)
Run
Hold
Tare zero (AI) (impulse functioning)
Alarm reset
Totalizer reset (impulse functioning)
Peaks reset
Sum total (impulse functioning)
Sum reset (impulse functioning)
Config. lock

101 Contact type

Selects the digital input 2 inactive contact.
Normally open (**Default**) Executes function with closed contact
Normally closed Executes function with open contact

11.8 Graphic

Parameters to configure the trend and bar graph management.

105 Graphic type

Selects the type of graph to be visualized on the relevant page.
Trend (**Default**)
Bar graph

106 Lower limit

Trend or bar graph lower limit.
-32767 + 32767 [Digit[1]], **Default**: 0.

107 Upper limit

Trend or bar graph upper limit.
-32767 + 32767 [Digit[1]], **Default**: 1000.

108 Trend time

Selects the trend sampling time.
1..3600 seconds, **Default**: 60s.

109 Data logger

Enables the over time registration of the process in eeprom
The sampling time is equal to the trend upgrading time. *(see par. 8.10)*
Disabled (**Default**)
Enabled

110 Data logger time

Selects the data logger sampling time.
1..3600 seconds, **Default**: 60s.

11.9 Analogue output in mA

Parameters to configure the analogue output in mA

112 Retransmission

Enables analogue output
Disabled (**Default**)
Process
Alarm 1
Alarm 2
Remote control by Modbus

113 Signal type

Selects the signal for the analogue output in mA
0..20 mA
4..20 mA (**Default**)

114 Lower limit

Analogue output mA lower limit range
-32767..+32767 [Digit[1]] (degrees.tenths for temperature sensors), **Default**: 0

115 Upper limit

Analogue output mA upper limit range
-32767..+32767 [Digit[1]] (degrees.tenths for temperature sensors) **Default**: 1000

116 Error value

Selects the value of the analogue output in mA in case of error
0 mA (**Default**)
4 mA
20 mA

11.10 Analogue output in Volt

Parameters to configure the analogue output in Volt

119 Retransmission

Enables analogue output
Disabled (**Default**)
Process
Alarm 1
Alarm 2
Remote control by Modbus

120 Signal type

Selects the signal for the analogue output in Volt
0..10 V (**Default**)

121 Lower limit

Analogue output Volt lower limit range
-32767..+32767 [Digit[1]] (degrees.tenths for temperature sensors), **Default**: 0

122 Upper limit

Analogue output Volt upper limit range
-32767..+32767 [Digit[1]] (degrees.tenths for temperature sensors) **Default**: 1000

123 Error value

Selects the value of the analogue output in Volt in case of error
0 V (**Default**)
10 V

11.11 Comunication port

Parameters to configure the serial communication port. *(see par. 9)*

126 Slave address

Selects the slave address for serial communication
1..254. **Default**: 240

127 Baud rate

Selects the baud rate for serial communication
1.200 baud
2.400 baud
4.800 baud
9.600 baud
19.200 baud (**Default**)
28.800 baud
39.400 baud
57.600 baud
115.200 baud

[1] *The decimal point visualization depends on the "Sensor type" and "Decimal point" selection.*

128 ComPort setting

Selects the format for the serial communication

8,N,1	8bit, No parity, 1 Stop bit (**Default**)
8,E,1	8bit, Even parity, 1 Stop bit
8,O,1	8bit, Odd parity, 1 Stop bit
8,N,2	8bit, No parity, 2 Stop bit
8,E,2	8bit, Even parity, 2 Stop bit
8,O,2	8bit, Odd parity, 2 Stop bit

129 Serial delay

Selects the serial delay

0..100 milliseconds. **Default**: 10

130 Show status

Visualize the COM word and shows the status on the process page.

YES	(**Default)**
NO	

Notes / Updates

Table of configuration parameters

1	Sensor type	29
2	Decimal Point	30
3	Measure unit	30
4	Lower limit V/I	30
5	Upper limit V/I	31
6	Offset calibration	31
7	Gain calibration	31
8	Latch On	31
9	Totalizer	31
10	Sum function	32
11	Store	32
12	Filter samples	32
13	Sampling frequency	32
17	V/I custom	33
18	01-Input value	33
19	01-Custom value	33
20	02-Input value	33
21	02-Custom value	33
22	03-Input value	33
23	03-Custom value	34
24	04-Input value	34
25	04-Custom value	34
26	05-Input value	34
27	05-Custom value	34
28	06-Input value	34
29	06-Custom value	34
30	07-Input value	34
31	07-Custom value	35
32	08-Input value	35
33	08-Custom value	35
34	09-Input value	35
35	09-Custom value	35
36	10-Input value	35

37	10-Custom value	35
38	11-Input value	35
39	11-Custom value	36
40	12-Input value	36
41	12-Custom value	36
42	13-Input value	36
43	13-Custom value	36
44	14-Input value	36
45	14-Custom value	36
46	15-Input value	36
47	15-Custom value	37
48	16-Input value	37
49	16-Custom value	37
54	Alarm type	37
55	Contact type	37
56	Alarm threshold	38
57	Deviation threshold	38
58	Hysteresis	38
59	Reset type	38
60	Error contact	38
62	Actuation delay	38
63	Lower limit	38
64	Upper limit	39
65	Protection	39
69	Alarm type	39
70	Contact type	39
71	Alarm threshold	39
72	Deviation threshold	40
73	Hysteresis	40
74	Reset type	40
75	Error contact	40
77	Actuation delay	40
78	Lower limit	40
79	Upper limit	40

80	Protection	41
84	Language	41
86	Contrast	41
87	Reverse	41
88	Screen timeout	41
89	Display direction	42
90	Starting page	42
95	Digital input function	42
96	Contact type	42
100	Input function	43
101	Contact type	43
105	Graphic type	43
106	Lower limit	43
107	Upper limit	44
108	Trend time	44
109	Data logger	44
110	Data logger time	44
112	Retransmission	44
113	Signal type	44
114	Lower limit	45
115	Upper limit	45
116	Error value	45
119	Retransmission	45
120	Signal type	45
121	Lower limit	45
122	Upper limit	46
123	Error value	46
126	Slave address	46
127	Baud rate	46
128	ComPort setting	47
129	Serial delay	47
130	Show status	47

Read carefully the safety guidelines and programming instructions contained in this manual before using/connecting the device.

Prima di utilizzare il dispositivo leggere con attenzione le informazioni di sicurezza e settaggio contenute in questo manuale.

RoHS Compliant

File n° 469441

PIXSYS s.r.l.

www.pixsys.net

sales@pixsys.net - support@pixsys.net

online assistance: http://forum.pixsys.net

2300.10.169-RevG

Software Rev. 3.06

280220